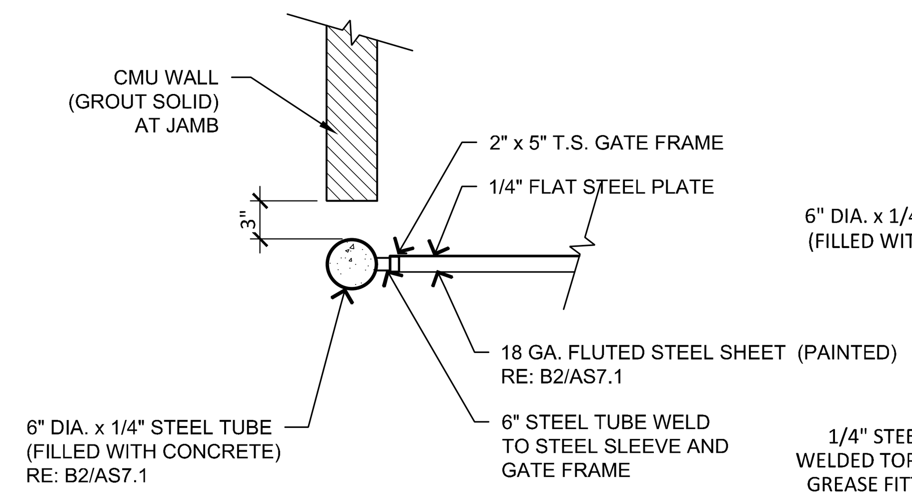


B1 **GATE POST**

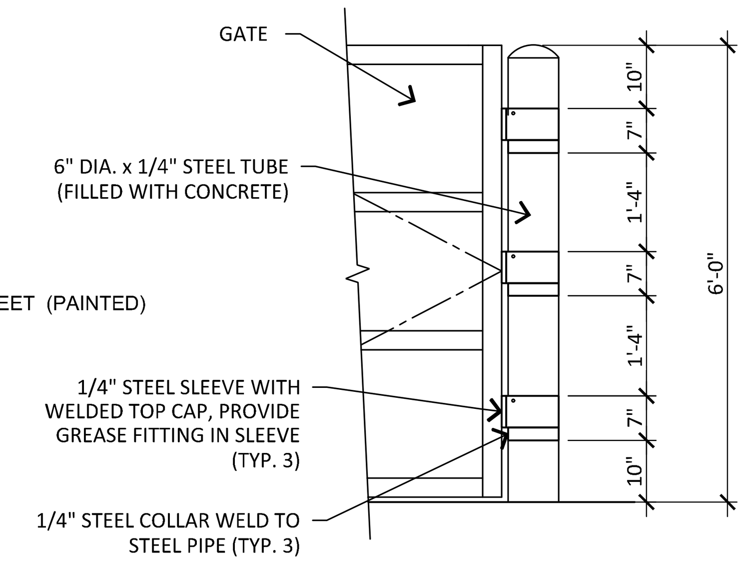


B2 **ELEVATION**

**NOTES:**

1. INSIDE DIMENSIONS: 10' WIDE, 8' DEEP, AND 6'* HIGH. A MIN 5' HIGH WALL / GATE MUST BE PROVIDED FOR RECESSED ENCLOSURES.
2. CONCRETE BASE 4" THICK AT ENCLOSURE AND 6" THICK EXTENDED 6' BEYOND FRONT OF ENCLOSURE, BOTH WITH SUB-BASE OF 4". BASE MUST BE LEVEL WITH GRADE.
3. FOUR 4" X 4' STEEL PIPES SET 1' IN GROUND FILLED WITH CONCRETE, MOUNTED INSIDE ENCLOSURE. SIDE POLES PLACED 1/2 THE DISTANCE FROM FRONT TO BACK. BACK POLES PLACED 1/3 THE DISTANCE OF 6" FROM THE WALL.
4. 9' WIDTH FOR EACH ADDITIONAL CONTAINER. ADD 2 ADDITIONAL PIPES AT REAR OF ENCLOSURE FOR EACH ADDITIONAL CONTAINER.
5. GATES TO BE MOUNTED ON SEPARATE POST NOT CONNECTED TO WALL.
6. GATES TO BE SOLID AND PAINTED TO MATCH ENCLOSURE, CUSTOM DESIGNS WILL BE APPROVED ON A CASE-BY-CASE BASIS.
7. CMU BLOCK MAY BE ANY STD SIZE, 8" MIN WIDTH W/ SMOOTH, SPLIT, SCORED OR FLUTED EXTERIOR FACE OR SPECIALTY BLOCK. TOP TO BE SOLID BLOCK, CAPPED OR ALL CORES FILLED. WALL TO BE FINISHED AND PAINTED TO MATCH BUILDING.

****TRASH ENCLOSURE PER CITY OF CHANDLER C-113 DETAIL**

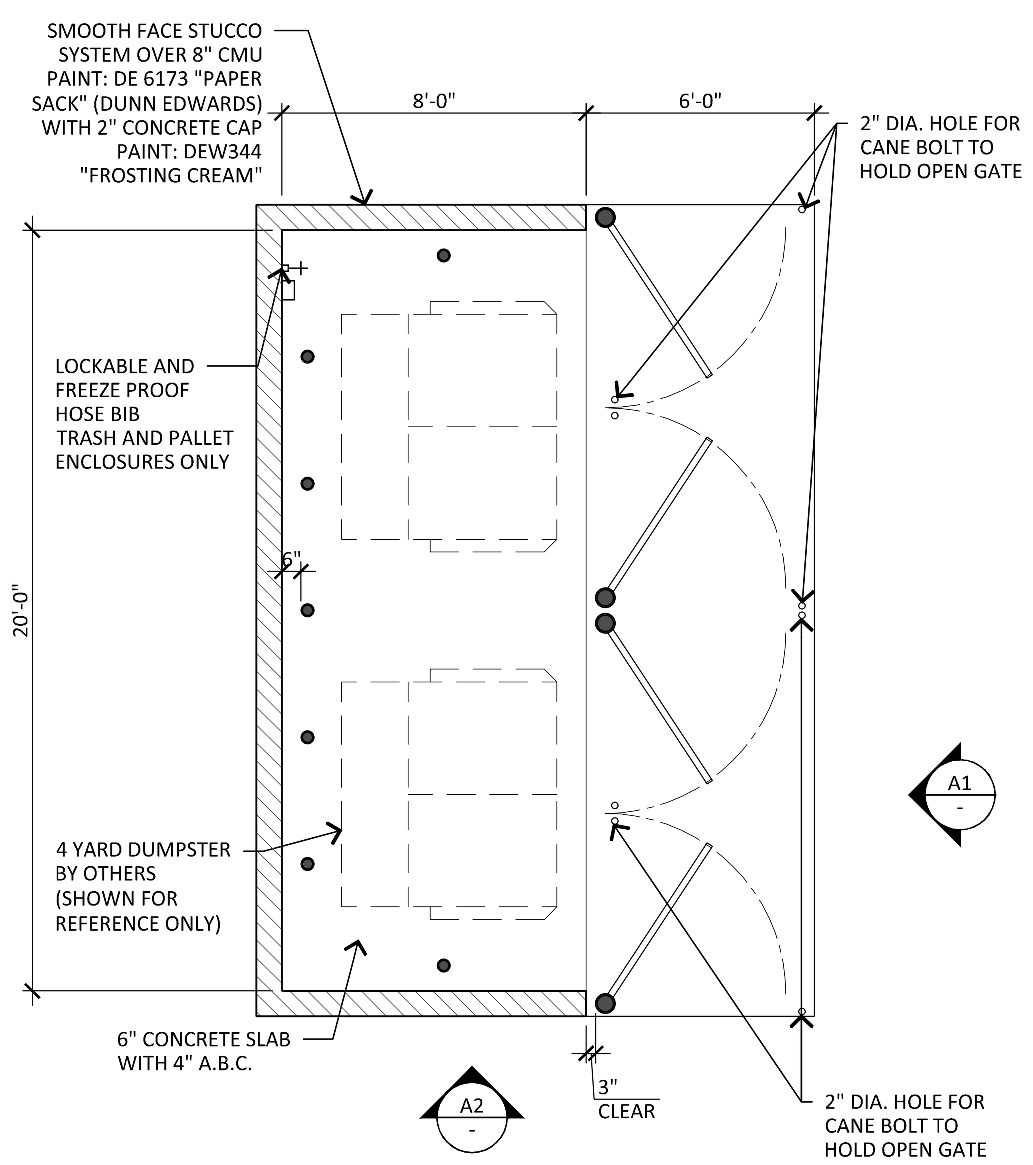


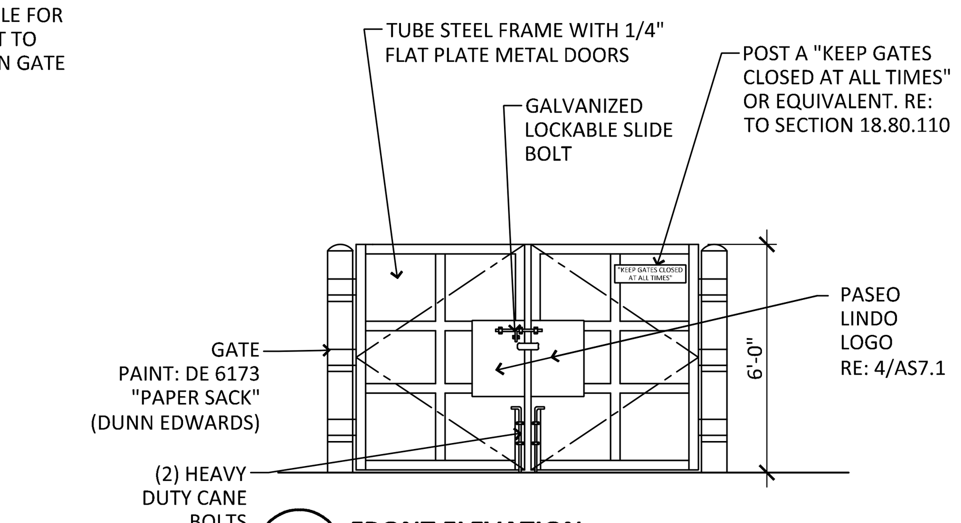


A 1 **FRONT ELEVATION**

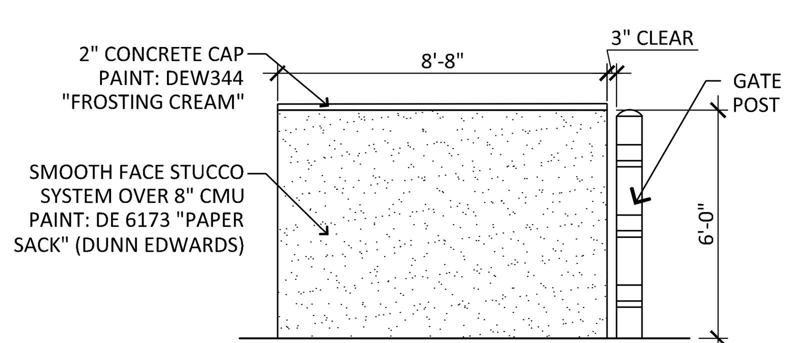


A 2 **TYPICAL ELEVATION**

## 12 DOUBLE TRASH ENCLOSURE

SCALE: 1/4"=1'-0'

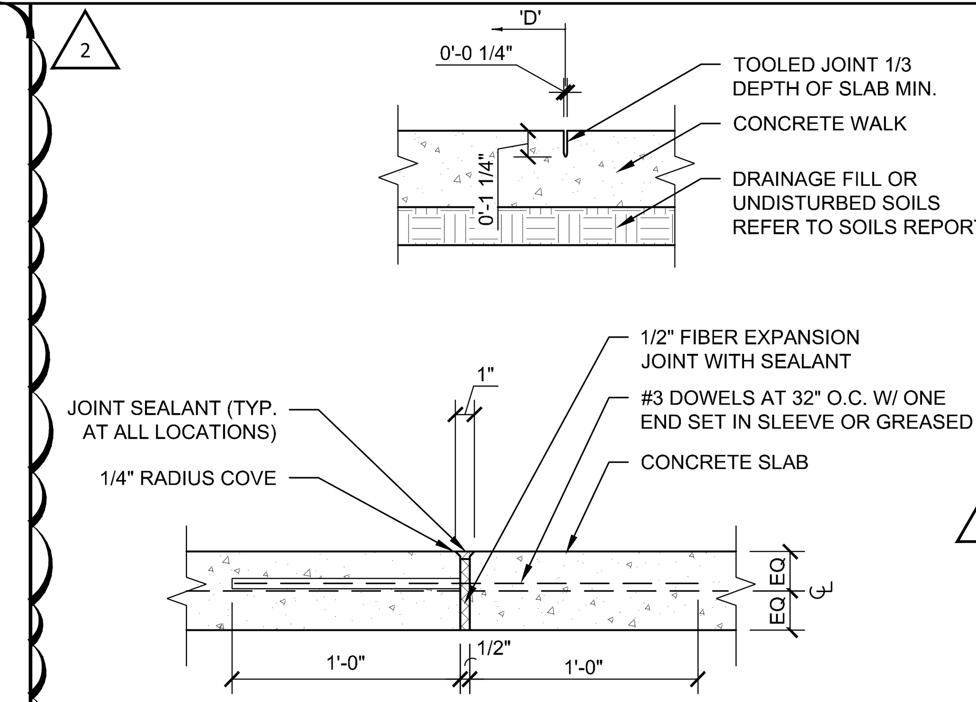


## 9 CONCRETE JOINTS

SCALE: 1-1/2"=1'-0"

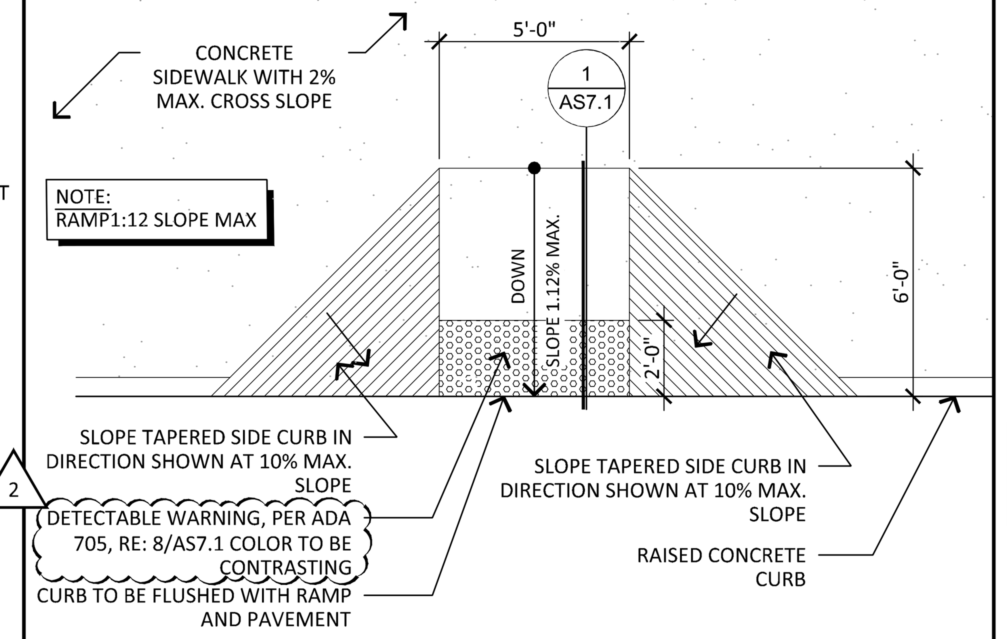


## 5 WALK AND LEVEL CHANGE

SCALE: 1/4" = 1'-0"

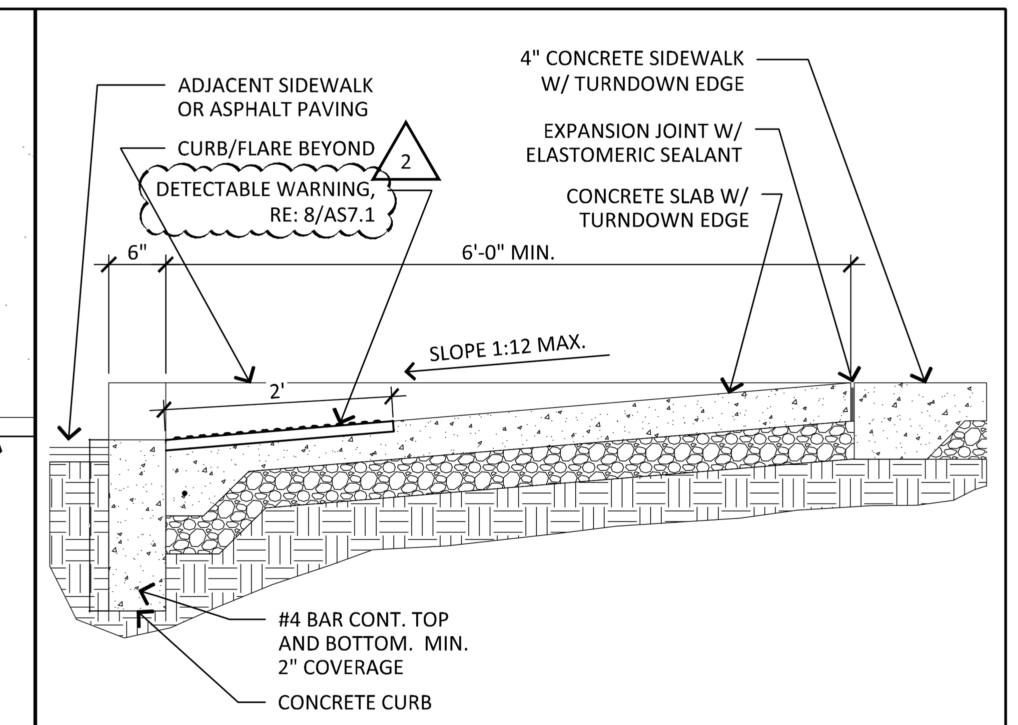


## 1 ADA RAMP SECTION

SCALE: 3/4"=1'-0"

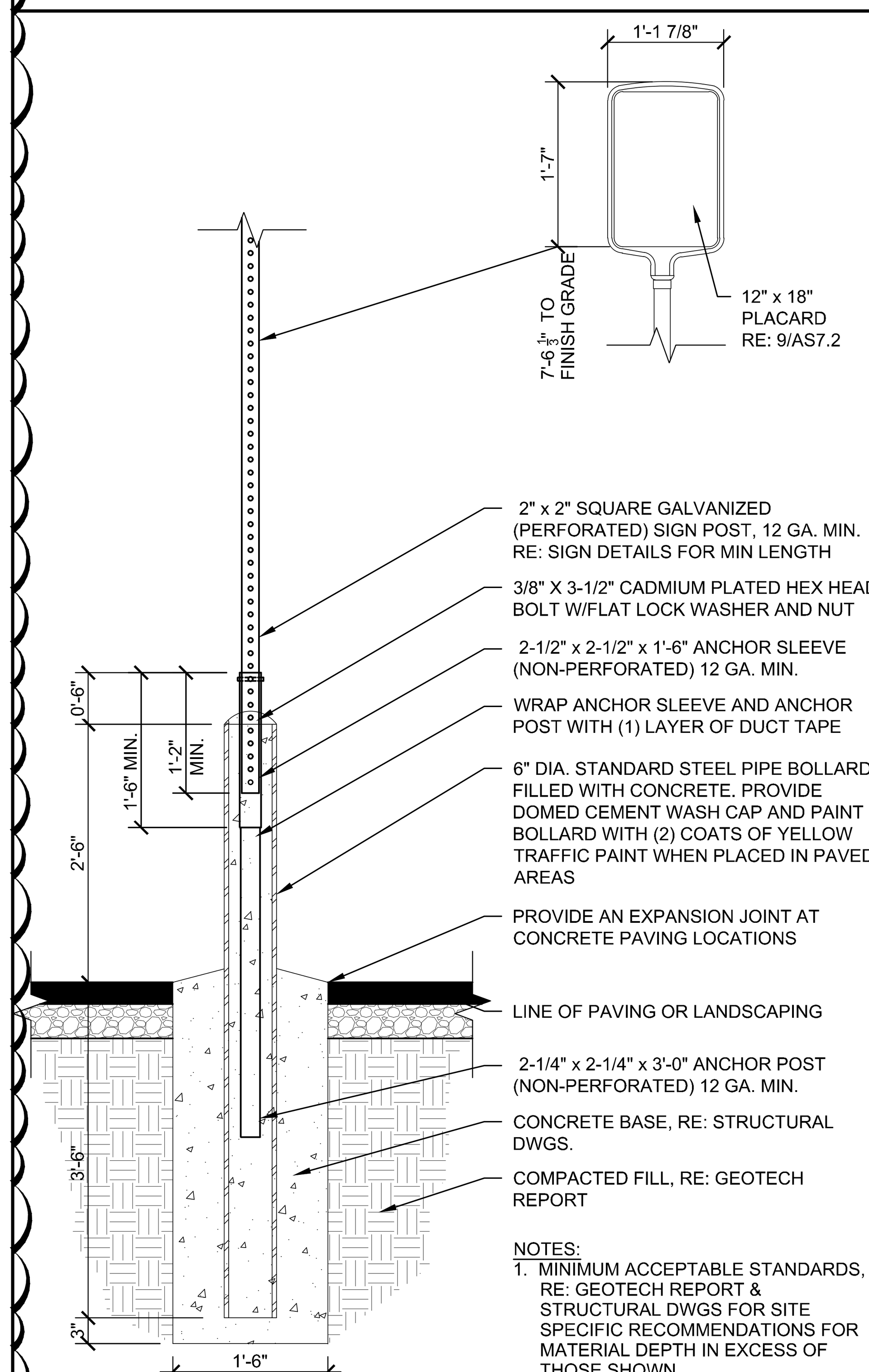


NOTES:
1. MINIMUM ACCEPTABLE STANDARDS, RE: GEOTECH REPORT & STRUCTURAL DWGS FOR SITE SPECIFIC RECOMMENDATIONS FOR MATERIAL DEPTH IN EXCESS OF THOSE SHOWN.
2. HEAVY DUTY POST TO BE USED AT ALL PARKING LOT LOCATIONS.

## 10 HEAVY DUTY SIGN BASE

SCALE: 3/4"=1'-0"

BOLTED ONE SIDED "READING" SERIES KEYSTONE RIDGE DESIGN BIKE RACK WITH DURABLE KEYSHIELD POLYESTER POWDER COAT FINISH APPLIED TO A 7-15 MIL THICKNESS IN BRONZE (39/60020)

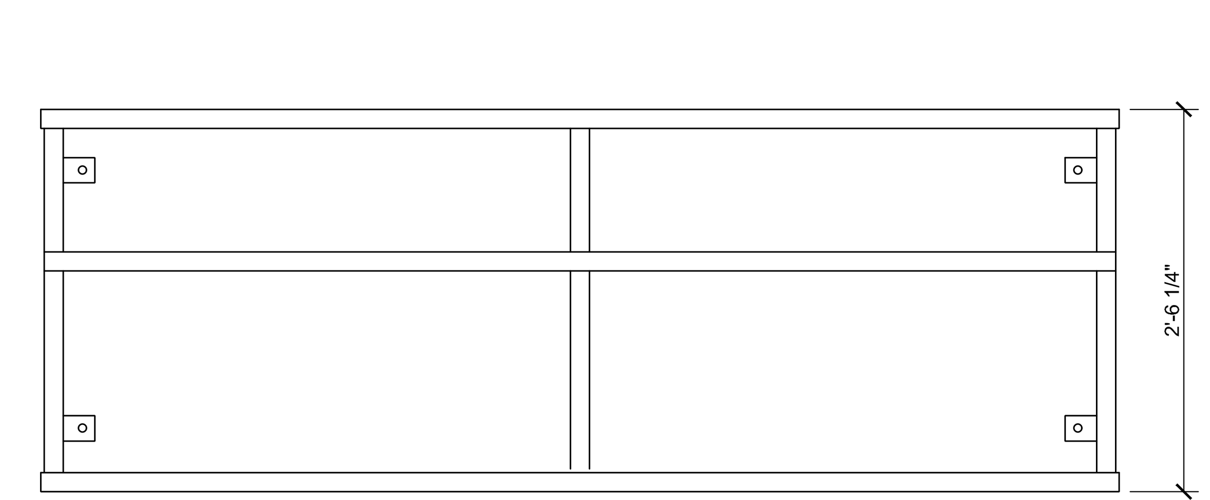


**FLOOR PLAN**

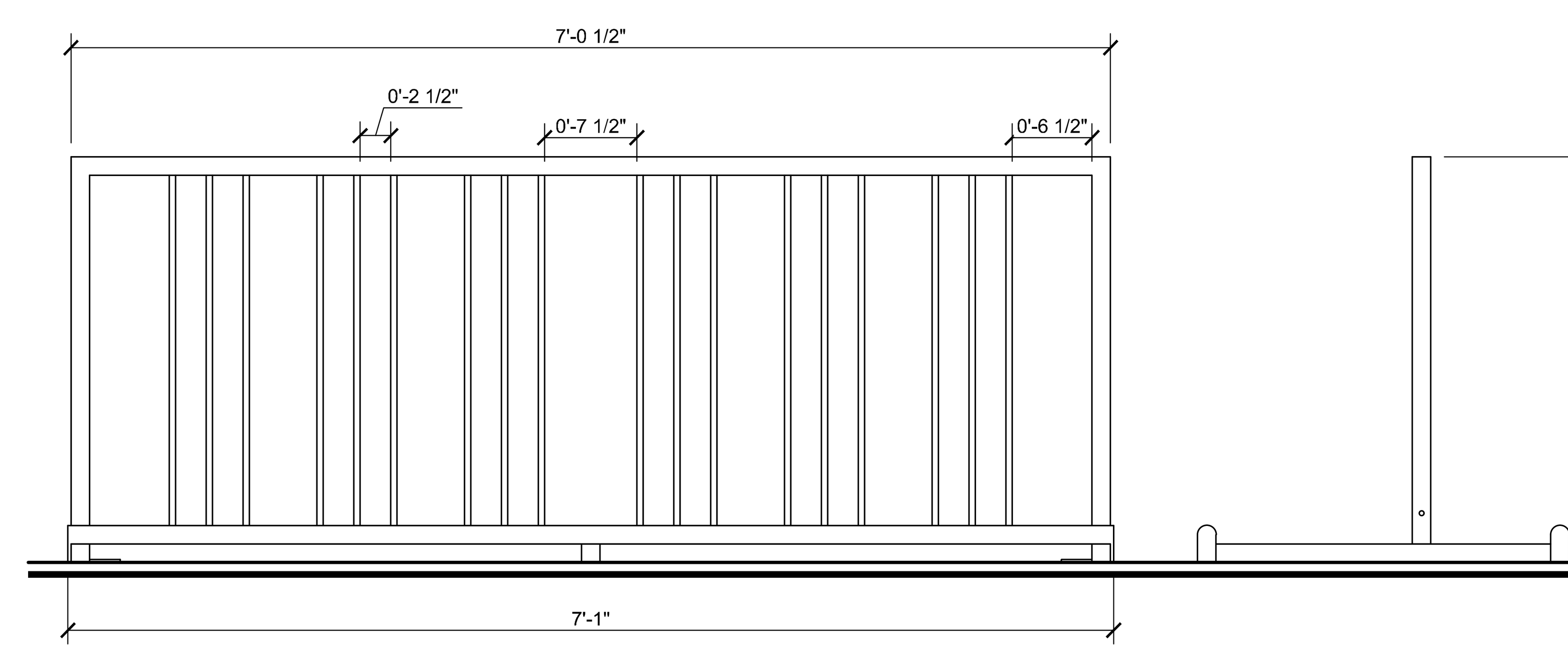


**ELEVATION**

## 7 BIKE RACK

SCALE: 1"=1'-0"

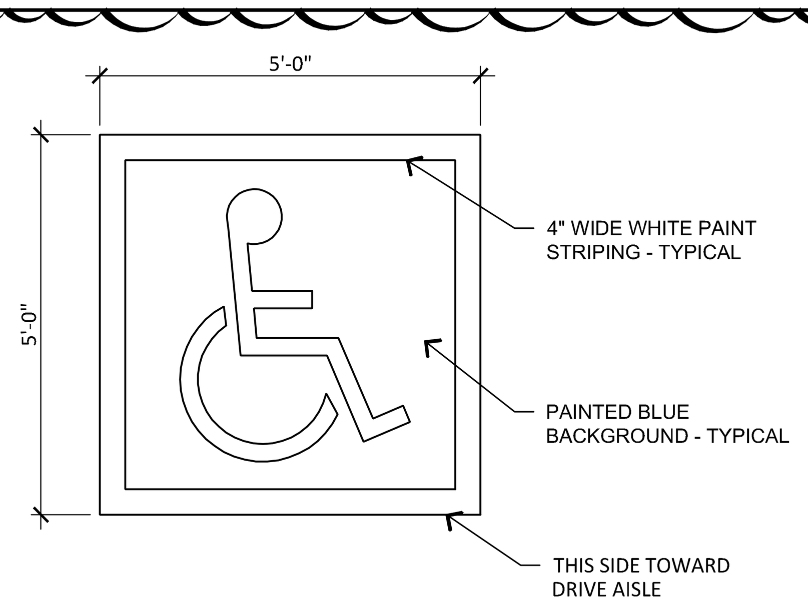


## 20 ACCESSIBLE SYMBOL

SCALE: 1/8"=1'-0"

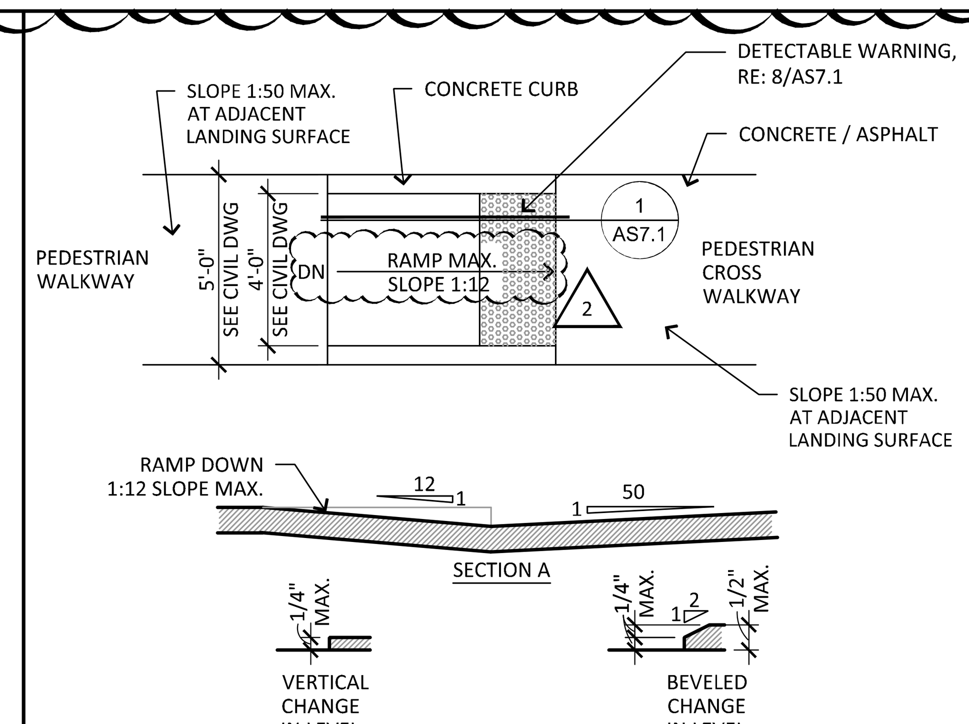


## 13 ACCESSIBLE RAMP & LEVEL CHANGE

SCALE: 1/4" = 1'-0"

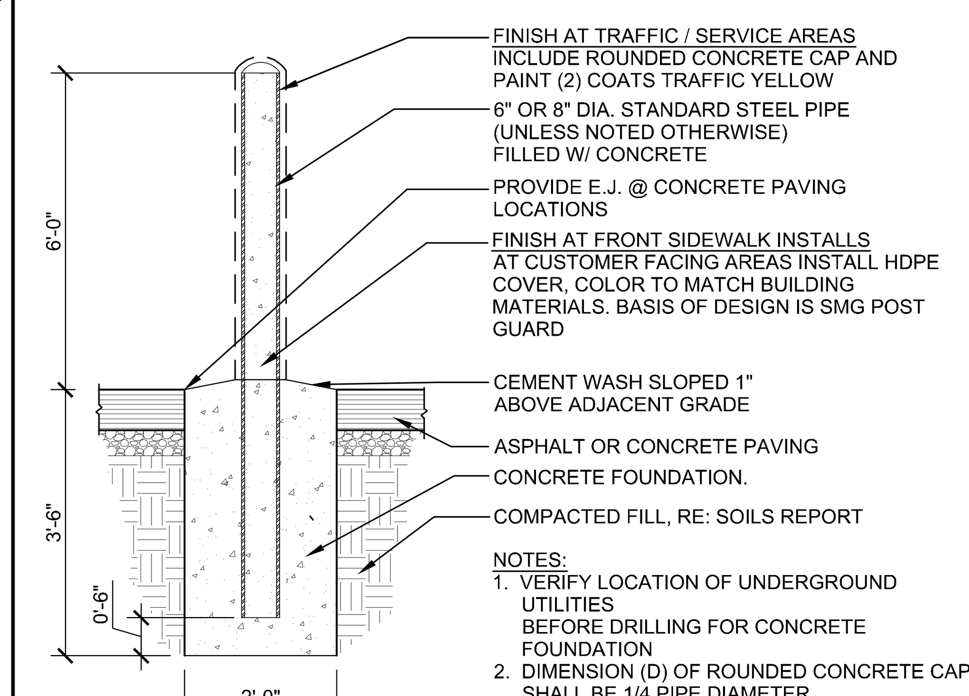


NOTES:
1. VERIFY LOCATION OF UNDERGROUND UTILITIES BEFORE DRILLING FOR CONCRETE FOUNDATION
2. DIMENSION (D) OF ROUNDED CONCRETE CAP SHALL BE 1/4 PIPE DIAMETER
3. PAINT "BROWN" WHEN LOCATED IN PLANTER
4. PROVIDE REMOVABLE PIPE BOLLARDS AT EQUIPMENT ACCESS PANELS AS REQUIRED

## 11 PIPE BOLLARD

SCALE: 1/2"=1'-0"

11B-705.1 Detectable Warnings

11B-705.1.1 General. Detectable warnings shall consist of a surface of truncated domes and shall comply with 11B-705.

11B-705.1.1.1 Dome Size. Truncated domes in a detectable warning surface shall have a base diameter of 0.9 inch (23 mm) minimum and 0.92 inches (23.4 mm) maximum, a top diameter of 0.45 inch (11.4mm) and 0.47 inch (11.9mm) maximum, and a height of 0.2 inch (5.1 mm).

11B-705.1.1.2 Dome Spacing. Truncated domes in a detectable warning surface shall have a center-to-center spacing of 2.3 inches (58 mm) minimum and 2.4 inches (61 mm) maximum, and a base-to-base spacing of 0.65 inch (16.5 mm) minimum, measured between the most adjacent domes on a square grid.

11B-705.1.1.3 Color and Contrast. Detectable warning surfaces shall comply with section 11b-705.1.1.3.1. The material used to comply with this section shall be an integral part of the detectable warning surface

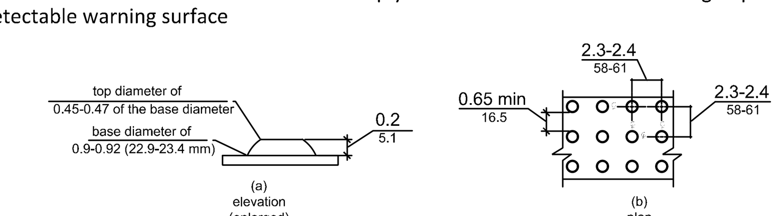


Figure 11B-705.1 Size and Spacing of Truncated Domes

11B-705.1.1.3.1 Detectable warning surfaces shall be yellow and approximate 33538 of SAE AMS-STD-595A

## 8 TRUNCATED DOME DETAIL

SCALE: FULL

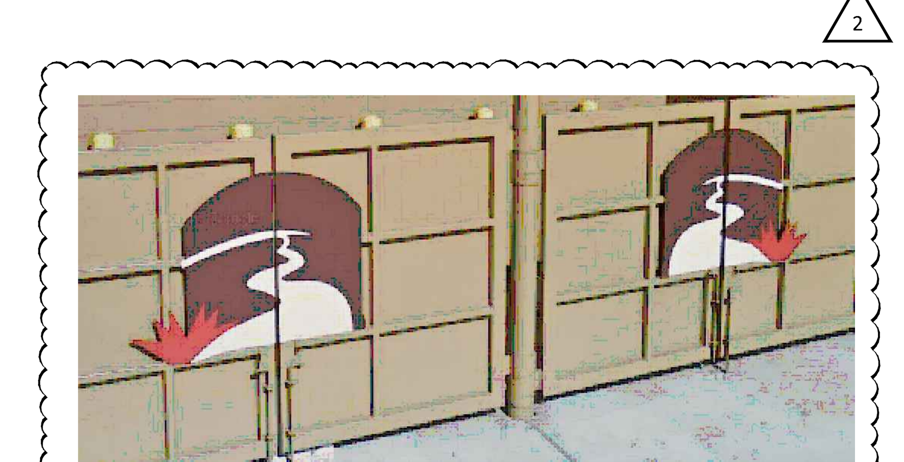

NOTE:
G.C. TO GET THIS LOGO MADE AND INSTALLED ON ALL ENCLOSURE GATES.

## 4 PASEO LINDO LOGO ON ENCLOSURE GATES

NTS

RKAA
ARCHITECTS INC
2233 EAST THOMAS ROAD, PHOENIX, ARIZONA 85016
602-955-3900
RKAA.com

REGISTERED ARCHITECT
CERTIFICATE NO.
9452
ROBERT W.
KUBICEK
07-02-2024
Date Signed
ARIZONA, U.S.A.
EXPIRES 06-30-2027

DATE : 10-31-24

| | | |
|---|---|---|
| 1 | 08-22-24 | OWNER CHANGES |
| 2 | 09-18-24 | CITY COMMENTS |
| 3 | 10-31-24 | ADDITIONS |

**SITE DETAILS**

NOTICE OF ALTERNATE BILLING OR PAYMENT CYCLE: THIS CONTRACT MAY ALLOW THE OWNER TO REQUIRE THE SUBMISSION OF BILLINGS OR ESTIMATES IN BILLING CYCLES OTHER THAN THIRTY DAYS. THIS CONTRACT MAY ALLOW OWNER TO MAKE PAYMENT ON SOME ALTERNATIVE SCHEDULE AFTER CERTIFICATION AND APPROVAL OF BILLING AND ESTIMATES. A WRITTEN DESCRIPTION OF SUCH OTHER BILLING CYCLE APPLICABLE TO THE PROJECT IS AVAILABLE FROM OWNER OR DESIGNATED AGENT.
NAME
ADDRESS
ADDRESS
CONTACT: Name
PHONE:

# NEW COMMERCIAL PAD
PAD 5B AT PASEO LINDO SHOPPING CENTER
NEC OF ARIZONA AVE AND OCOTILLO RD.
CHANDLER, AZ

CONSTRUCTION SET_11-12-24

COPYRIGHT 2023, ALL RIGHTS RESERVED. THIS DRAWING IS AN INSTRUMENT OF SERVICE. IT IS THE PROPERTY OF RKAA ARCHITECTS, INC. AND MAY NOT BE REPRODUCED, OR REPRODUCTION HEREOF USED, WITHOUT WRITTEN PERMISSION OF THE CORPORATION.

design by: RH
drawn by: RL
checked by: RH

**AS7.1**
project #: 23057